HAL
open science

# Normalized area solar cell and potential applications Received: **** **, *** Accepted: **** **, *** Published: **** **, ***

Marcel Pasquinelli, Jean-Jacques Simon, Judikaël Le Rouzo, François Flory, Ludovic Escoubas

## To cite this version:

Marcel Pasquinelli, Jean-Jacques Simon, Judikaël Le Rouzo, François Flory, Ludovic Escoubas. Normalized area solar cell and potential applications Received: **** **, *** Accepted: **** **, *** Published: **** **, ***. Journal of Applied Mathematics and Physics, 2017, 05 (05), pp.1106 - 1112. hal-01788949

**HAL Id: hal-01788949**

**https://amu.hal.science/hal-01788949v1**

Submitted on 9 May 2018

**HAL** is a multi-disciplinary open access archive for the deposit and dissemination of scientific research documents, whether they are published or not. The documents may come from teaching and research institutions in France or abroad, or from public or private research centers.

L'archive ouverte pluridisciplinaire **HAL**, est destinée au dépôt et à la diffusion de documents scientifiques de niveau recherche, publiés ou non, émanant des établissements d'enseignement et de recherche français ou étrangers, des laboratoires publics ou privés.

Journal of Applied Mathematics and Physics, 2017, *, *-*
http://www.scirp.org/journal/jamp
ISSN Online: 2327-4379
ISSN Print: 2327-4352

# Normalized area solar cell and potential applications

**Marcel Pasquinelli, Jean-Jacques Simon, Judikael Le Rouzo, François Flory and Ludovic Escoubas**

Aix - Marseille University, AMU - CNRS, IM2NP (UMR 7334)
Faculté des Sciences et Techniques, campus de Saint-Jérôme, avenue Escadrille Normandie Niémen - Case 231,
F-13397 Marseille Cedex, France
Phone/Fax number:+0033 491 288 081/+0033 491 288 352, e-mail: marcel.pasquinelli@univ-amu.fr

**How to cite this paper:** Author 1, Author 2 and Author 3 (2017) Paper Title. ******, *, *-*.
http://dx.doi.org/10.4236/***.2017.*****

**Received:** **** **, ***
**Accepted:** **** **, ***
**Published:** **** **, ***

Copyright © 2017 by author(s) and Scientific Research Publishing Inc.
This work is licensed under the Creative Commons Attribution International License (CC BY 4.0).
http://creativecommons.org/licenses/by/4.0/
Open Access

## Abstract

Nowadays in laboratories and in industries, distribution in solar cells sizes could be very large, hence, for the first time it is rather difficult to compare photovoltaic parameters which are size dependant (current, serial resistance, shunt resistance,..) and also performances of these cells.
Also, it will be useful for scale effect to extrapolate performances calculated on a unit size solar cell to commercial products, especially in the case of heterogeneous wafers used for the device.

## Keywords

Photovoltaic, Solar Cell, Efficiency, Serial resistance, Shunt resistance.

### Methodology

In this work, we have focused our model on standard multicrystalline p-type silicon solar cells, the standard solar cell produced by the most industries in 2011. Because of better radiations hardness and of the primer spatial domain applications, p type bulk silicon is the first studied and produced solar cells. [1]

We have both used PC1D [2] software and experimental measurement on commercial solar cells in order to extract parameters for our electrical model used with SPICE software [3] (**Figure 1**).

:

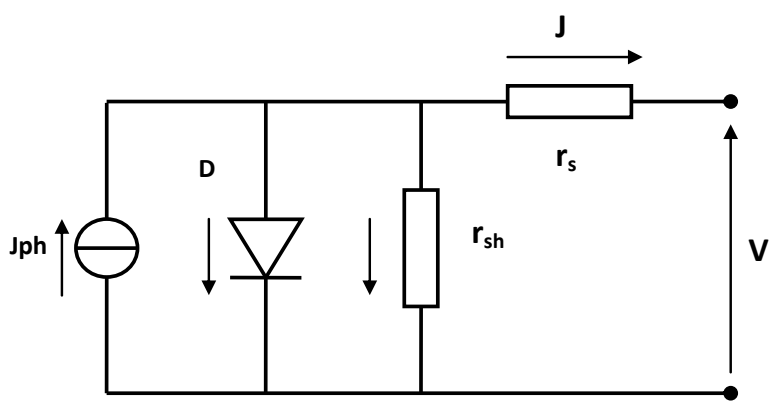

**Figure 1**: One diode electrical model of illuminated solar cell

Single diode model for illuminated solar cell could be used here [4, 5, 6], this model take in account the shunt across the junction (rsh), the lumped resistance (rs).

In this model, the output (I-V) characteristic is given by the equation 1

$$I = Iph - I_D - I_{Rsh} = Iph - I_o\left[\exp\left(\frac{q(V + Rs.I)}{akT}\right) - 1\right] - \frac{V + Rs.I}{Rsh.} \qquad (1)$$

Equation 1: (I-V) analytical expression for one exponential model solar cell

The difficulty in equation 1is that two kinds of parameters coexists, intensive parameter such as voltage (V), temperature (T),… and extensive ones such as current (I), resistances (Rs and Rsh). If we want a quantitative comparison between solar cells with different surface areas (S), it is necessary to give the current density, J, versus voltage, V, equation. This expression is simply derived from (1) with the assumption:

$$J = \frac{I}{S} \qquad (2)$$

$$J = Jph - J_D - J_{Rsh} = Jph - J_o\left[\exp\left(\frac{q(V + Rs.S.J)}{akT}\right) - 1\right] - \frac{V + Rs.S.J}{Rsh.S} \qquad (3)$$

We can now introduce a normalized area solar cell (S = 1cm$^2$ for instance) with resistance specifications given in Ω.cm$^2$ units.

$$rs = Rs.S \quad (4) \qquad \text{And} \qquad rsh = Rsh.S \quad (5)$$

$$J = Jph - J_D - J_{Rsh} = Jph - J_o\left[\exp\left(\frac{q(V + rs.J)}{akT}\right) - 1\right] - \frac{V + rs.J}{rsh} \qquad (6)$$

It is now obvious that for a given solar cell (material and process) the serial and shunt resistance decrease if the area increases. To highlight this, for two solar cells with S and S' area respectively and if S' > S, equations 4, 5 and 6 imply that:

$$rs = Rs.S = R's.S' \quad (7) \qquad \text{and} \qquad rsh = Rsh.S = R'sh.S' \quad (8)$$

For instance, if $S' = 2.S$ , $R's = \frac{Rs}{2}$ and $R'sh = \frac{Rsh}{2}$

**Best values for parameters used in equation** (6)

To estimate Jo, Jph, a, rs and rsh values, we have made some statistical measurements on elaborated solar cells characterized under standard one sun test condition (AM1,5G) (**Table 1** )

| Obscurity current density (mA/cm²) | Diode ideality factor | Serial resistance (Ω) | Shunt resistance (Ω) | Photocurrent density (mA/cm²) ( one sun) |
|---|---|---|---|---|
| $10^{-7}$ | 1,2 | 1.5 | 1500 | 33 |

**Table 1**: Electrical and photovoltaic parameters average values for p-type multi-crystalline silicon solar cells (surface area size = 1 $cm^2$)

**Applications and results**

**1 – Surface area effect on photovoltaic properties in one sun application**

Thanks to this model, it is relatively easy to extrapolate photovoltaic parameters computed for a unit size solar cell to another size, just by calculating Rs and Rsh for the size S. The formula used in this case is:

For size S: $Rs = \frac{rs}{S}$ and $Rsh = \frac{rsh}{S}$

In order to verify this assumption, PC1D and SPICE codes are used, we have modelized a unit solar cell with parameters generally used in conventional p-type silicon solar cells. **Table 2** shows values obtained for three surface areas, it is clear that these results are in good agreement with the previous assumption.

| Area ($cm^2$) | Voc (mV) | Jsc ($mA/cm^2$) | Isc(mA) | Efficiency (%) | Rs (ohm) | Rsh (ohm) |
|---|---|---|---|---|---|---|
| **1** | **602,2** | **32,8** | **32,8** | **14,80** | **1,5** | **1500** |
| 10 | 602,2 | 32,8 | 328 | 14,78 | 0,15 | 150 |
| 100 | 602,2 | 32,8 | 3280 | 14,77 | 0,015 | 15 |

**Table 2**: Evolution of photovoltaic parameters with the surface areas of the cells

**2 – Serial resistance loss in concentrated photovoltaic CPV solar cells**

Concentrated photovoltaic is very attractive due to the fact that for the same solar cell size, the photovoltaic properties are increased with X, when the device is illuminated under X sun.

A current question is whether conventional solar cells can be used for low concentration applications, typically X<10.
With our model, it is evident that it is not possible, because of the high serial resistance value.
In fact, figures 2a and 2b show the drastic effect of the serial resistance. If solar flux is concentrated on conventional solar cells (rs = 1.5 Ω.$cm^2$), Jsc increases linearly if X < 10 and saturates after this value, but and most importantly, there is a decrease in conversion efficiency.

If you want to optimise this possible utilisation for conventional solar cells, the rs value must be divided by a factor of ten (rs = 0.15 Ω.$cm^2$), which is not easy with today's technology.

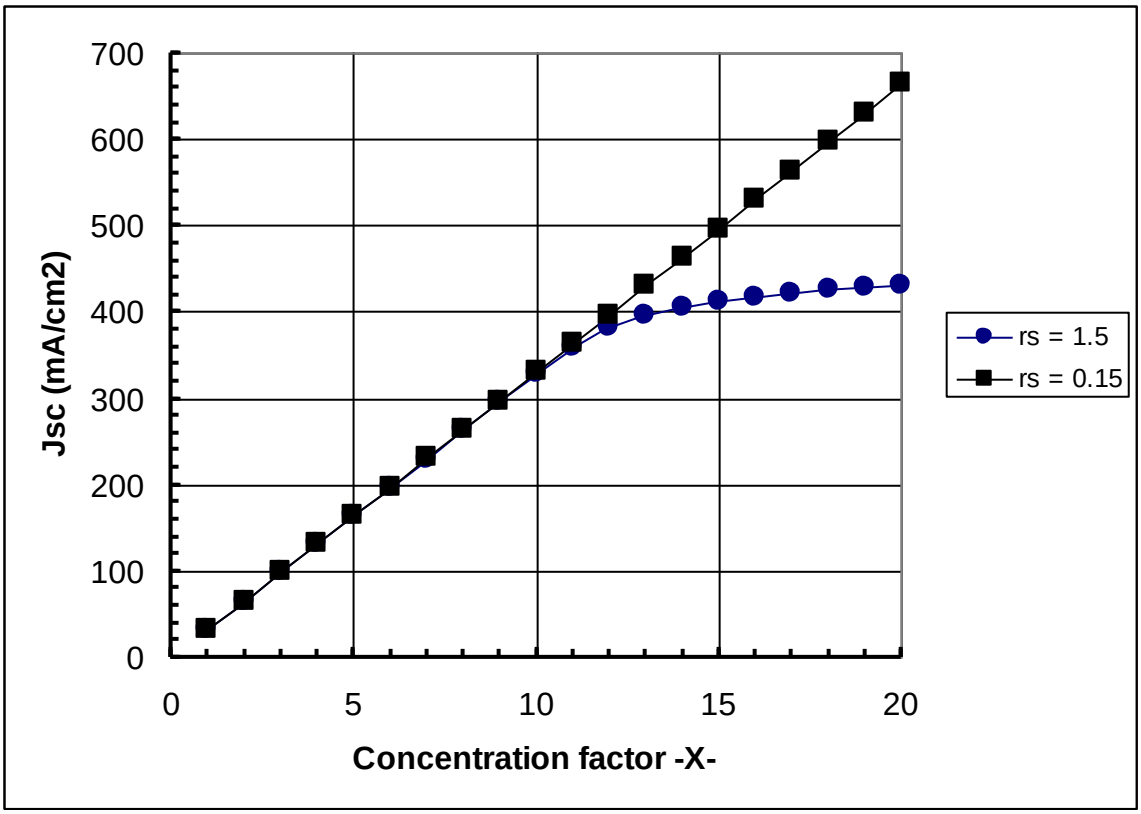


**Figure 2a**: Short circuit current density evolution with concentration factor for two serial resistances values.( rs =1.5 $\Omega.cm^2$ and 0.15 $\Omega.cm^2$)

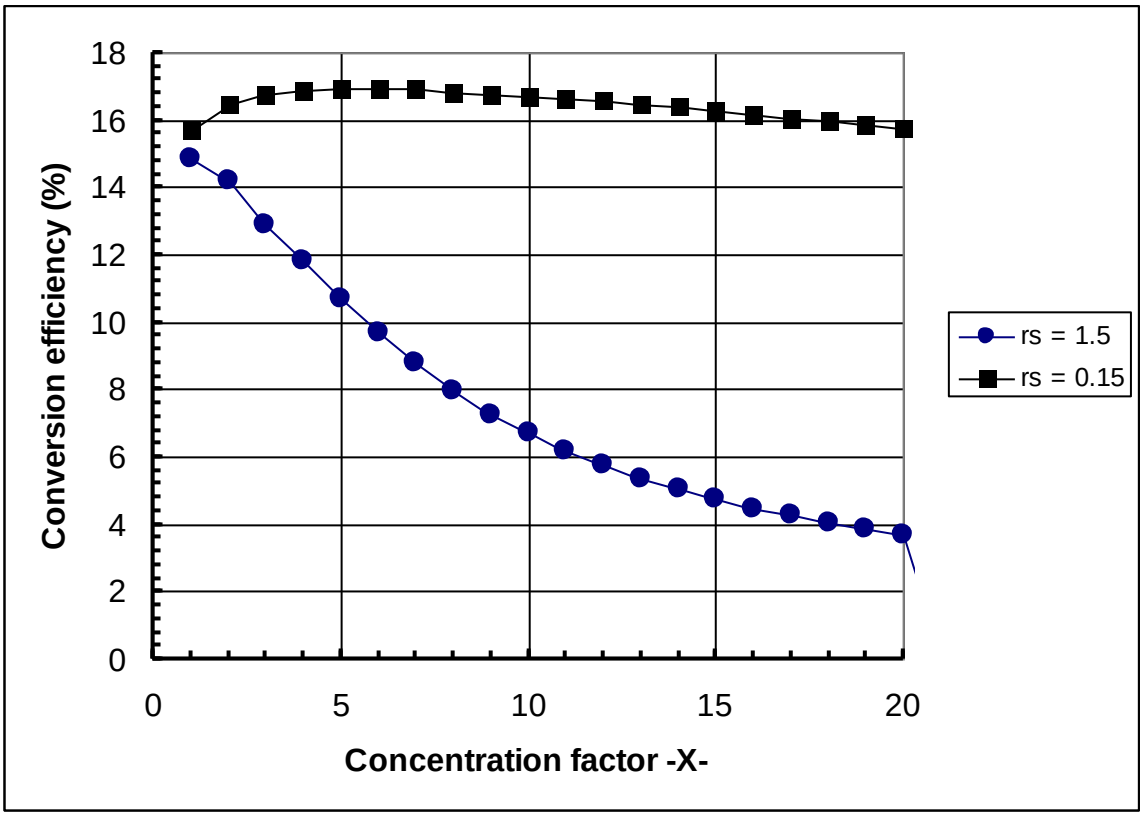


**Figure 2b**: Conversion efficiency evolution with concentration factor for two serial resistances values.

**3 – Solar cell modelized by N unit solar cells**

In a solar cell, global performances are largely relative to local ones, specifically in heterogeneous material such as multi-crystalline silicon.
To evaluate local properties it is useful to divide a large size into N unit solar cells, in **figure 3** in order to illustrate this method, we have chosen N = 4, the USCs are connected in parallel.

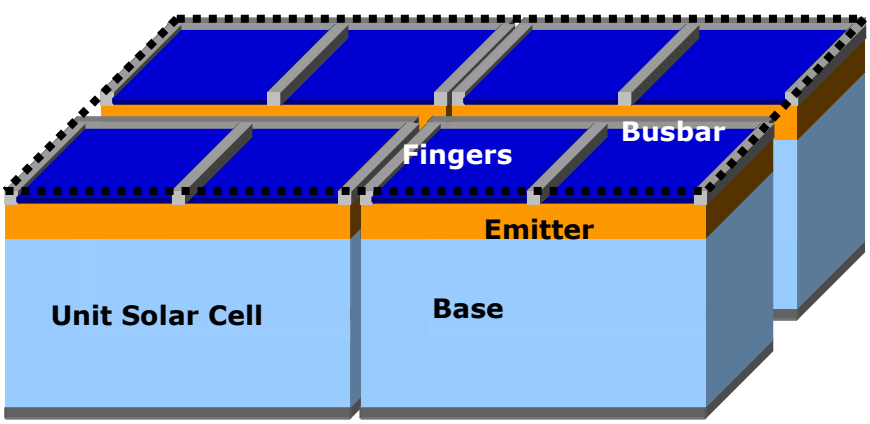


**Figure 3**: **Homogeneous solar cell composed by four parallel Unit Solar Cells**

**Application 1: Homogeneous solar cell**

For this case each unit solar cells are identical

| | Voc (mV) | Jsc (mA/cm$^2$) | Isc(mA) | Efficiency (%) | rs (ohm) | rsh (ohm) |
|---|---|---|---|---|---|---|
| | **623** | **35** | **35** | **15** | **1,5** | **1500** |

4a

| | |
|---|---|
| **U.S.C** | **U.S.C** |
| **U.S.C** | **U.S.C** |

4b

| Voc (mV) | Jsc (mA/cm$^2$) | Isc(mA) | Efficiency (%) |
|---|---|---|---|
| **623** | **35** | **140** | **15** |

4c

**Figure 4**: **Homogeneous solar cell parameters:**
4a: U.S.C parameters;
4b: Solar cell made by four distributed homogeneous U.S.C: and 4c: Final solar cell parameters.

Evidently, the performances for the final solar cell are conserved, but this ideal case could be attributed to an homogeneous solar cell, in terms of materiel, for instance monocrystalline wafer and uniform processes.
Generally, especially for multicrystalline ingots, heterogeneous properties govern final solar cell performances. In a rapid approach we can evaluate the effects of local defects at the scale of individual USC on global performance, such as local shunt (rsh), local bad electrical contact (rs) and local bad photon collection or conversion (Jph)

Now, to evaluate the impact of unit solar cells on the final device, we have chosen to see the influence of rs, rsh and Jph after a 50% variation of their initial value.

**Application 2: Serial resistance discrepancy**

In the electrical model figure 1, serial resistance rs is a lumped value that takes into account contact resistance on the emitter and the base, grid line contact and semiconductor resistivity. This final value depends greatly on the process and also on possible degradation during the solar cell's lifetime.

| | Voc (mV) | Jsc (mA/cm$^2$) | Isc(mA) | Efficiency (%) | rs (ohm) | rsh (ohm) |
|---|---|---|---|---|---|---|
| | **623** | **35** | **35** | **15** | **2.25** | **1500** |

5a

| | |
|---|---|
| **U.S.C rs** | **U.S.C** |
| **U.S.C** | **U.S.C** |

5b

| Voc (mV) | Jsc (mA/cm$^2$) | Isc(mA) | Efficiency (%) |
|---|---|---|---|
| **623** | **35** | **140** | **14,81** |

5c

**Figure 5**: **Serial resistance discrepancy** 5a: U.S.C parameters; 5b: Solar cell made by four distributed U.S.C: and 5 c: Final solar cell parameters.

In this case, illustrated by figure 5a, b and c, we have just increased the rs value for one cell, this modified value is equal to 2,25 ohms, which represents also 50% variation. We can see in figure 5c, that only conversion efficiency of the solar cell is affected and decreases to 14,81 %.

**Application 3: Shunt resistance discrepancy**

For this case, we have taken into account a 50% decrease of the shunt resistance in the unit solar cell (figure 6a, b, and c). Especially in multicristalline wafers, shunt leakage must be attributed to crystallographic defects decorated with metallic impurities crossing the junction. During the solar cell fabrication, shunt resistance degradation must appear at the aperture of the junction process.

| | Voc (mV) | Jsc ($mA/cm^2$) | Isc(mA) | Efficiency (%) | rs (ohm) | rsh (ohm) |
|---|---|---|---|---|---|---|
| | **623** | **35** | **35** | **15** | **1.50** | **750** |

6a

| | |
|---|---|
| **U.S.C rsh** | **U.S.C** |
| **U.S.C** | **U.S.C** |

6b

| Voc (mV) | Jsc ($mA/cm^2$) | Isc(mA) | Efficiency (%) |
|---|---|---|---|
| **623** | **35** | **140** | **14,98** |

6c

**Figure 6**: **Shunt resistance discrepancy** 6a: U.S.C parameters; 6b: Solar cell made by four distributed U.S.C: and 6c: Final solar cell parameters.

We can see that for this local variation, the total properties of the cell are not greatly affected, but evidently if the shunt leakage increases the impact will be more important.

**Application 4: Local photocurrent generation discrepancy**

This case must be attributed to an accidental partial shadowing of the cell, or more problematically to a local area with poor electronic quality due to the presence of electrical recombining impurities for instance. We have also kept with the same total variation (50%) of the unit Jsc value, 17.5 mA/cm$^2$ instead of 35 mA/cm$^2$, and the results are described in figure 7a, b and c.

| | Voc (mV) | Jsc (mA/cm$^2$) | Isc(mA) | Efficiency (%) | rs (ohm) | rsh (ohm) |
|---|---|---|---|---|---|---|
| | **623** | **17.5** | **17.5** | **15** | **1.50** | **1500** |

7a

| | |
|---|---|
| **U.S.C Jsc** | **U.S.C** |
| **U.S.C** | **U.S.C** |

7b

| Voc (mV) | Jsc (mA/cm$^2$) | Isc(mA) | Efficiency (%) |
|---|---|---|---|
| **617** | **30.5** | **122** | **13.1** |

7c

**Figure 7**: **Local photocurrent generation/recombination discrepancy** 7a: U.S.C parameters; 7b: Solar cell made by four distributed U.S.C: and 7 c: Final solar cell parameters.

It is obvious that this situation is the worst case, because of the degradation of all photovoltaic parameters ($V_{oc}$, $J_{sc}$ and $\eta$)

**Conclusion:**

We have proposed a method seeking to explain properties of solar cell by local analysis thanks to a normalized area solar cell concept.
Most of actual solar cells technologies are based on multicristaline materials (Si, CIGS, CdTe,) and for each category as we have done for silicon, parameters for each unit solar cell must be defined.
As we have described in this article, several applications could be concerned with this analysis and for further studies, it will be such interesting to implement and compare this model with local photoelectrical characterizations as Light Beam Induced Current (LBIC), Photoluminescence and Electroluminescence Imaging.

Reference:

[1]. J.E. Cotter, J.H. Guo, P.J. Cousins, M.D. Abbott, F.W. Chen, K.C. Fisher,
P-type versus n-type silicon wafers: prospects for high-efficiency commercial silicon Solar Cells, IEEE Trans. Electron Devices 53 (2006) 1893–1901

[2]. PC1D Version 5: 32-bit Solar Cell Modelling on Personal Computers, *26th IEEE Photovoltaic Specialists Conference, Anaheim, Sep-Oct 1997, pp.207- 210.*

[3]. Nagel, L. W, and Pederson, D. O., *SPICE (Simulation Program with Integrated Circuit Emphasis)*, Memorandum No. ERL-M382, University of California, Berkeley, Apr. 1973

[4]. J.P. Charles, M. Abdelkrim, Y.H. Muoy, P. Mialhe
A practical method of analysis of the current-voltage characteristics of solar cells
Solar Cells, 1981, 4, 169-178

[5]. Kaminsky, J.J. Marchand , A. Laugier
*I–V* methods to extract junction parameters with special emphasis on low series resistance
Solid State Electronics, 1999, 43, 741-745

[6]. M. Chegaar, Z. Ouennoughi, F. Guechi, and H. Langueur
Determination of Solar Cells Parameters under Illuminated Conditions
Journal of Electron Devices, Vol. 2, 2003, pp. 17-21